T/Ladd/Tehachapi/Antelope/1004-231

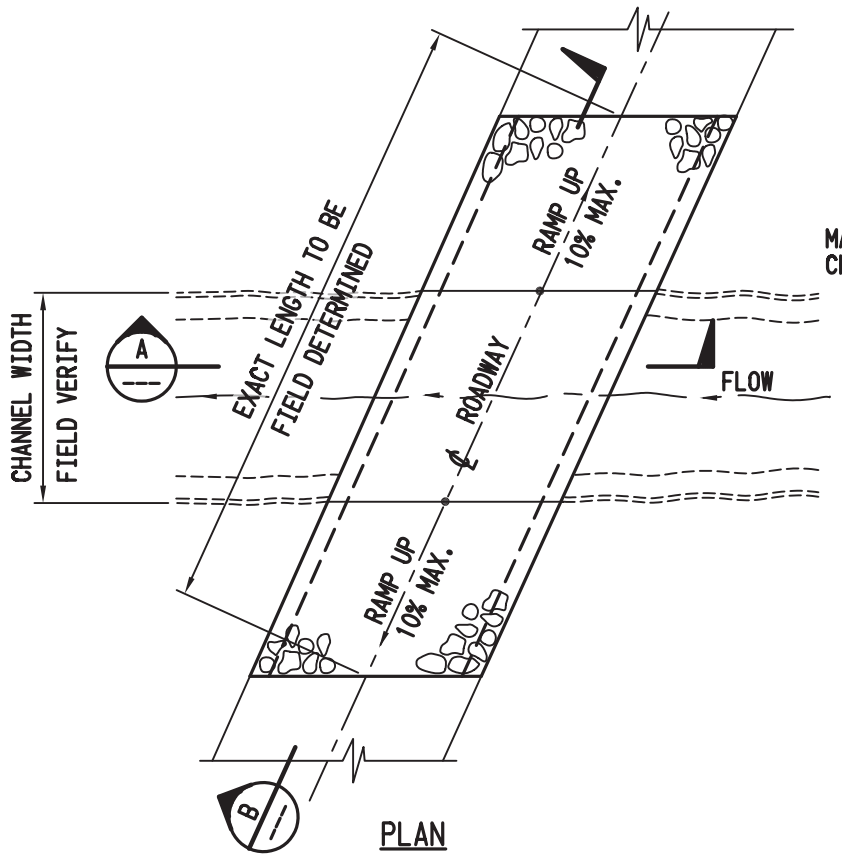


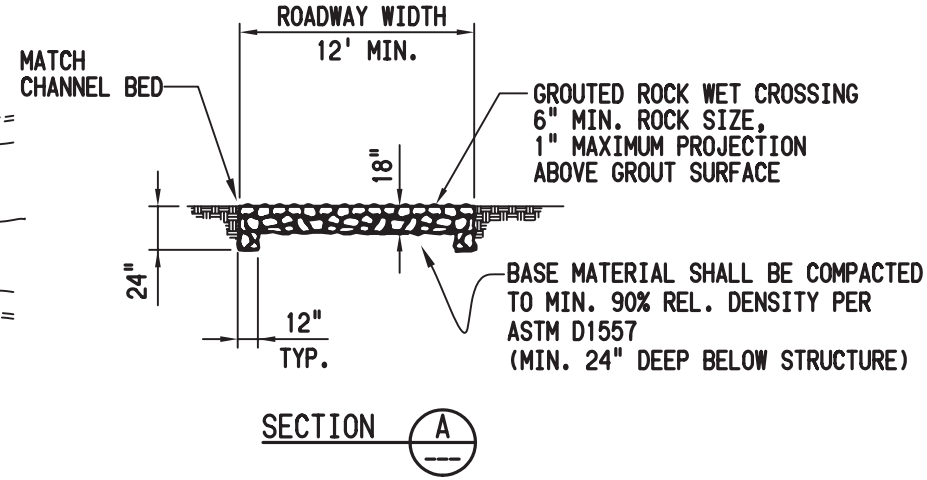


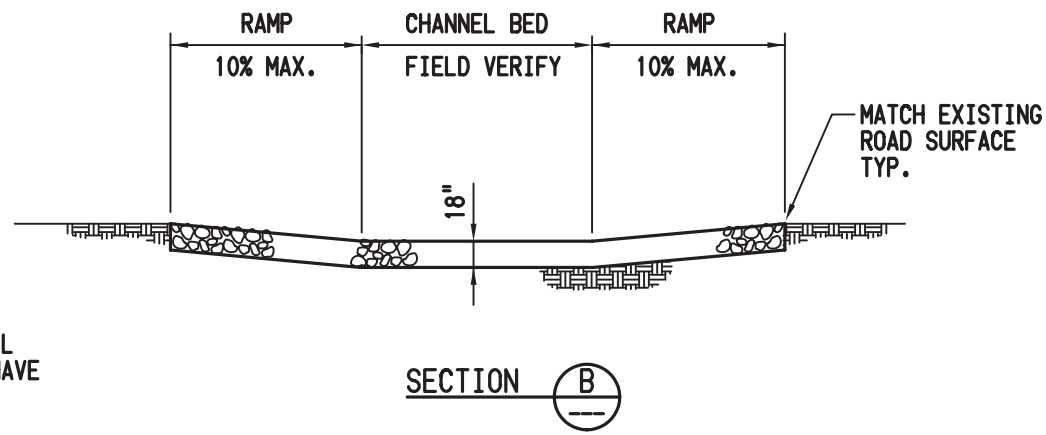


NOTES:

1. PORTLAND CEMENT USED FOR GROUT SHALL BE TYPE II PORTLAND CEMENT CONFORMING TO ASTM C-150.

2. ALL ROCKS SHALL BE HARD, DURABLE, AND NOT DISINTEGRATE OR SOFTEN WHEN EXPOSED TO WATER OR WEATHERING. ROCK USED FOR WET CROSSING SHALL BE SMOOTH AND WITHOUT SHARP EDGES, AND SHALL HAVE A MINIMUM SPECIFIC GRAVITY OF 2.5

| | | | |
|---|---|---|---|
| SOUTHERN CALIFORNIA EDISON An EDISON INTERNATIONAL® Company | Antelope Transmission Project PEA - Segments 2 & 3 | Figure 3-22. GROUTED ROCK WET CROSSING TYPICAL INSTALLATION | 2005 |